International Journal of Economics and Financial Issues

ISSN: 2146-4138

available at http: www.econjournals.com

International Journal of Economics and Financial Issues, 2018, 8(1), 205-216.

Determinant Profitability and Implications on the Value of the Company: Empirical Study on Banking Industry in IDX

Luqman Hakim[1]*, Sugianto[2]

[1]Faculty of Economic, Universitas Persada Indonesia Y.A.I - Jakarta, Indoneia, [2]Indonesian Banking Practice, Indonesia. *Email: luqman106@yahoo.com

ABSTRACT

This research is intended to test several factors affecting profitability that can impact the value of the company in the banking industry in Indonesia. Exogenous variables used are company growth, capital adequacy ratio (CAR), nonperforming loan, loan to deposit ratio, operational cost to operating income, deposit growth, with endogenous variable in first research model using return on assets while in second research model using company value. The type of data used onto this study is secondary data in the form of time series and cross section with research objects of banking companies in Indonesia stock exchange (BEI) during the period 2010–2015 with a population of 42 companies. Of the population selected as a sample of 27 companies. Analysis of research results using multiple regression at the level of α = 10% with Eviews9 application which resulted random effect model estimation. The result of the research with partial test of the first research model is the variable of company growth significantly influence to profit return on assets (ROA) with positive correlation. Variable CAR, non-performing loan, DPK growth significantly affects ROA profitability with negative correlation. The company with the highest level of sensitivity is Bank International Indonesia with BNII trading code, while the smallest sensitivity is Bank MNC International with BABP trading code. This research model can be used significantly and the exogenous variable can explain the endogenous variable of 25.2%. In the second research model, the partial test produced non-performing loan variable significantly influences the negative correlation between corporate value, as well as the growth of DPK significantly affects the firm's value with positive correlation, but ROA profitability as intervening variable does not function as mediation to explain to the value of the company. Although this second research model can be used significantly but the extent of exogenous variables can only explain the endogenous variable of 10.6%.

Keywords: Firm Growth, Capital Adequacy Ratio, Nonperforming Loan, Loan to Deposit Ratio, Operating Cost to Operating Income, Deposit Growth, Return on Assets, Value of the Firm (Tobin's Q)
JEL Classification: G11

1. INTRODUCTION

The purpose of the company with reference to theory of the firm pioneered by Coase (1937) and developed by Williamson (1979), namely maximizes profitability and corporate value. Maximizing the value to the company is very important for the company, because the maximization of corporate value means maximizing shareholder wealth that is the main goal of the company. The value of the firm is the perception of investors to the success rate of companies that are often associated with stock prices.

One source of funding that has a major influence on the Indonesian economy is the banking industry. Banking is one of the cornerstones of Indonesia's economic development especially in the face of the era of free trade and globalization, both as an intermediary between the deficit sector (lack of funds) and surplus of funds and as agent of development (Wijaya, 2007).

Since the second half of the 2008, financial markets in various parts of the world experienced unfavorable economic conditions. This situation is triggered by the housing credit crisis in the United States that extends to investment and commodity markets. The collapse of the sub-prime mortgages market coupled with the sharp rise of the US dollar and a series of companies that went bankrupt and taken over by other entities caused the banking and financial crisis at the end of the year.

For the banking sector in Indonesia in general, the crisis is caused by limited liquidity in both rupiah and in foreign currency, the scarcity of credit facilities resulting from consolidation policies by banks of their credit portfolios, rising interest rates and rising borrowing costs in line with rising credit risk.

The current conditions of Indonesian banking are different from most developed countries' banking conditions which have an increase in NPLs and decreased capital. Loan disbursements dropped significantly due to shortfalls in both demand and supply side, unapproved but unused credit facilities increased, the loan to deposit ratio (LDR) also had a downward tendency so that banks reduced their exposure to foreign exchange risk, especially foreign banks and private foreign exchange banks. However, banks are able to maintain credit quality; NPLs can be maintained at 4% range. With a high level of credit quality, the bank is able to maintain its capital adequately. The national banking CAR is also high enough to give banks the ability to expand credit. This relatively strong banking condition provided significant expansion and credit growth of 2004–2012. Investment and consumption loans increased more than fivefold while working capital loans increased more than fourfold. Indonesian banks are able to accommodate this credit growth due to the low burden of credit elimination and relatively high capital. The banking financial performance of 2000 may be the best performance after the banking crisis of 1998, seen from the financial statements issued by banking companies that many banking companies had slumped in 2000 have shown improvement, which is marked by improvements in the non performing loans (NPL), capital adequacy ratio (CAR) and net interest margin (Mabruroh, 2004).

Financial ratio analysis is based on historical financial data whose main purpose is to give an indication of company performance in the future. The level of corporate health is important to improve efficiency in running its business, so that the ability to gain benefits can be increased which ultimately can avoid the possibility of bankruptcy in banking business (Wijaya, 2007).

In Table 1, from the financial statements of the national commercial banks (including the banking of sharia banks because of data in the can from the consolidated financial statements) shows that in the year 2009–2011 CAR still shows a horizontal trend. CAR began to experience an increasing trend starting in 2011 until the year 2015 while return on assets (ROA) and Tobin have a tendency of decline in that period. In the loan ratio measured by LDR also experienced an increasing trend of growth of 2012–2015 while ROA and Tobin have a declining growth trend in that period. This phenomenon contradicts the usual phenomenon, which illustrates the inverse relationship of CAR and LDR growth trends with profitability growth trends (ROA) and corporate value (Tobin).

In the NPL ratio or problematic credit data shows an increasing trend of growth from 2013 to 2015 while ROA and Tobin have a tendency of declining growth in that period. In the ratio of operational cost (BOPO) data shows the weakening trend of growth of the period 2009–2013 but experiencing an increasing trend of growth in the period 2013–2015 this trend has a trend contrary to the growth trend of ROA and Tobin in both periods. In the ratio of DPK data growth shows a declining growth trend from 2012 to 2015 this is in line with the growth trend of ROA and tobin.

From the background of the above research, shows the existence of the gap phenomenon that is the difference between financial data development with the existing theory so that the authors to conduct further research on the determinant of banking profitability (ROA) with implication to the value of the company (Tobin's Q).

Based on the gap phenomenon as shown in Table 1., and the research gap which has been described previously, the research problem in this research can be formulated that there is still inconsistency between empirical phenomenon with existing theory and inconsistency of research result of influence of firm growth variable (firm growth) CAR, NPL, Loan (LDR), and Operational and Operating Income (BOPO), DPK (DG) to Profitability (ROA) growth and its implications for Tobin's Q.

Based on the previous description then there are 15 problem formulas that link between profitability and corporate value and the determinant of both namely; Company Growth (FG), CAR, NPL, LDR, BOPO and growth of DPK (DG). The research questions on this research are as follows: (1) Be the growth of company (FG), CAR, LDR, BOPO and growth of DPK (DG) partially have an effect on profitability (ROA), (2) be the growth of company (FG), CAR, LDR, BOPO and growth of DPK (DG) together affects profitability (ROA), (3) be the growth of company (FG), CAR, LDR, BOPO, growth of DPK (DG) and profitability (ROA) partially influence to company value (TOBIN), (4) be the growth of the company (FG), CAR, LDR, BOPO, growth of DPK (DG) and profitability (ROA) jointly affect the company value (TOBIN).

There are several objectives in this research: (1) To estimate and partially analyze the effect of company growth (FG), CAR, LDR, BOPO and DPK (DG) growth on profitability (ROA) in national banks listed on IDX during 2010–2015, (2) to estimate and analyze the influence of company growth (FG), CAR, LDR, BOPO and DPK (DG) growth simultaneously on profitability (ROA) in national banks listed on IDX during 2010–2015 period, (3) to estimate and analyze the effect of partial growth of company (FG), CAR, LDR, BOPO, growth of DPK (DG) and profitability (ROA) to company value (TOBIN) on national banks listed on IDX during 2010–2015 period, (4) to estimate and analyze the influence of company growth (FG), CAR, LDR, BOPO, growth of DPK (DG) and profitability (ROA) together to the value of the company (TOBIN) in the national banks listed on the BEI during 2010–2015.

Table 1: Financial Bank Ratio in Indonesia 2010–2015 period (%)

RASIO	2010	2011	2012	2013	2014	2015
CAR	17.64	15.26	17.43	18.13	19.57	21.39
LDR	76.60	78.63	83.58	89.70	89.42	92.11
NPL	1.58	2.17	1.87	1.77	2.16	2.49
BOPO	84.43	81.81	74.10	74.08	76.29	81.49
Δ DPK	19.10	15.80	13.60	12.29	7.25	7.62
ROA	1.45	2.01	3.11	3.08	2.85	2.32
Tobin'Q	1.1919	1.1409	1.1322	1.0873	1.1311	1.0975

Source: Secondary data processed, 2015

2. LITERATURE REVIEW

2.1. Value of the Firm

Tobin's Q ratio was first proposed by Tobin in 1969. Siallagan and Machfoedz (2006. p. 38) mentioned Tobin's Q is one of the alternatives used in determining corporate value because it shows current financial market estimates at the return value of each dollar of incremental investment, Where:

1. If the Q-ratio is above one, it indicates that investing in an asset produces a profit that gives a higher value than the investment expenditure, this will stimulate new investment because the investor values the firm high and performs well, and is considered capable of generating more cash flow both in the future.
2. If the Q-ratio is below one, the investment in the asset is rated low by the market. This will cause investors are reluctant to invest in the company.

Kim et al. (1993) in Daghestani et al., 2014 explained that theoretically Tobin's Marginal Q is associated with a firm's investment rate, but a direct measurement of Tobin's marginal Q is not possible. For this reason Tobin's average Q is proposed as a proxy for marginal Q, the average Q usage in explaining the investment has been supported by Tobin himself, and the average Q usage has been used in many empirical studies. Chung and Pruitt (1994) in Wolfe and Sauaia 2003 proposed a simple formula for Tobin's Q called approximation Q which is the sum of Market Value Equity (preferred stock market price of the number of shares outstanding) with preferred stock (liquidation value of preferred stock) and Debt (book value of short-term debt, long-term debt, and other debt) whose results are then divided by total assets.

2.2. Efficient Market Hypothesis

Guerin and Gun (2011) research cites Fama (1970) assertion that a capital market is said to be efficient when the listed security prices fully reflect all relevant information. Efficient in this sense is referred to as efficiently informational. The relevant information may be in the form of past information, information available to the public, or information available to the public or not. The level of capital market efficiency is divided into three types, namely:

1. Weak form efficiency; The market is considered to be an efficient weak form if the listed security prices reflect fully on the past information.
2. Semi-strong forms efficiency (semi strong form efficiency).

The market is considered to be an efficient half-robust form if the listed security prices reflect fully the published information.

3. Strong form efficiency (strong form efficiency).

The market is considered to be an efficient strong form if the listed security prices reflect fully the published information as well as the company's private information.

2.3. Signaling Theory

It was first proposed by Lintner (1956) stating that the company's stock price will change when a dividen payout changes. Some of the researchers that put forward are: Ross (1977), followed by Leland and Pyle (1977) and Bhattacharya (1979). This model is based on the idea that managers that have good information about the company will try to convey the information about outside investors in order to increase the company's stock price.

Signal theory explains the importance of companies presenting information about the public (Morris, 1987). Such information may be financial statements, company policy information or other information voluntarily disclosed by company management. Spence (1973) states in this theory there are two parties involved, namely the insiders and outsiders. Inside parties such as management act as a party that gives signals and outside parties such as investors act as parties that receive the signal. Management as a party of course has all information relating to the company both positive and negative information, but not always management will publish the information as a whole to investors. In order to create and maintain a good corporate image, management typically deliberately communicates only positive information about investors, resulting in an asymmetric information phenomenon (Eriksson and Simpson, 2007).

2.4. Asymetric Information Theory

This theory was first put forward in Aberlof's research (1970), followed by Spence (1973), Haugen and Senbet (1979), Myers and Majluf (1984), Cheung and Krinsky (1994). Asymmetric information, according to Brigham and Houston (2006) is a situation where managers have different (better) information about the prospect of the firm than the investor has.

This is a condition where corporate managers have more information about operations and prospects than others. Thus, the management might think that the stock price is currently overvalued (too expensive). If this is supposed to happen, then management would have thought it would be better to offer new shares (so it can be sold at a price that is more expensive than it should be). But the financiers will interpret if the company offers new shares, one of which may be the current stock price are too expensive (according to the perception of the management). As a result investors will bid for the new stock at a lower price. Therefore, the emission of new shares will lower the stock price (Saidi, 2004).

2.5. Agency Theory

In agency theory called agency relationship is a contract in which one or more persons that are principal assign tasks to agent/task on behalf of principal and delegate authority to agent (Jensen and Meckling, 1976). In theory this principal is the owner/shareholder and the meaning of agent is the management that manage the company. Basically the company's management tends to gain the most profit with the cost of others (Jensen and Meckling, 1976; Mantysaari, 2012). Argue that agency problems will occur when the proportion of managerial ownership of a company's stock is <100% so managers tend to act to pursue their self-interest and are not based on maximizing value of funding decision-making. Jensen and Meckling to argue that the above conditions are a consequence of the separation of managerial functions by ownership or often called the separation of the decision-making and risk bearing functions of the firm. Management does not bear the risk of mistakes in making decisions, the risk is fully borne by the principal. Therefore, management tends to make consumptive

and non-productive expenditures for their personal interests, such as the increase of salary, facilities and status.

Jensen and Meckling to argue that ownership concentration has a positive impact on firm value because concentrated ownership will minimize agency costs. According to agency theory, Jensen and Meckling (1976) define agency costs as the amount of costs incurred in relation to structuring, administering and enforcing contracts (both formal and informal) plus residual loss. Enforcement costs include the cost of monitoring and bonding, ie the amount of resources spent by the principal (the shareholder/owner) and the agent (manager) to ensure the running of the contract enforcement. Residual costs include opportunity loss when the contract is optimal but not fully implemented. So it can be said that agency costs include all costs that refer to contracting costs, transaction costs, moral hazard costs, and information costs. Some agency costs may be reduced by control procedures.

2.6. Profitability (Rentability - Earning)

Hanafi and Halim (2009) define profitability ratios as ratios that measure a company's ability to generate profits (profitability) at certain levels of sales, assets, and capital stock. Simamora (2000) describes profitability as a key measure of overall corporate success. The Committee on Terminology cited by Harahap (2003) defines profitability as the amount derived from the reduction of cost of goods sold, other costs and losses from operating income or income. Meanwhile, according to APB Statement which is also quoted Harahap, interpret profitability is surplus/surplus income over the cost during one accounting period.

Profitability/performance of banks is a measure of the success of a bank that reflects the ability of management in managing their business. Performance appraisal is a systematic, self-directed and objective assessment of the future, on the policy or management decision in managing the resources and funds entrusted to it in order to improve the capability of performing better management functions. The size of banking performance is not at the interest rate of the loan because if the loan interest rate used as a measure of bank performance will be biased, since the average interest rate on the loan will depend on the loan portfolio of the bank. Similarly, the average deposit interest rate depends on the distribution of the maturity of various deposits. So in general the most appropriate performance measurement is profitability, where to achieve a high profit the company must be effective and efficient in managing its activities.

In banking to measure the level of health is earnings (earnings) or better known as the ability of banks to gain profit. Please note that if the bank always suffered losses in its operational activities then of course over timing the loss will eat the capital owned by the bank. Bank that is in such condition of course can not be said to be healthy.

Assessment of profitability factors includes evaluation of the performance of rentability, sources of profitability, sustainability (rentability), and profitability management. Assessment is done by considering the level, trend, structure, stability of bank rentability, and comparison of bank performance with peer group performance, either through qualitative or quantitative aspect analysis. In determining the peer group as a comparison scale, the bank needs to pay attention to the business scale, characteristics, and/or complexity of the bank's business and the availability of data and information owned.

Based on Bank Indonesia Regulation (PBI) Number: 13/1/PBI/2011, regarding the Rating of Commercial Banks, valuation of profitability factor is categorized into 5 ratings, Rank 1, Rank 2, Rank 3, Rank 4, and Rank 5. Sequence a smaller revenue ability factor rating reflects better profitability.

2.7. ROA

ROA is used as performance indicator or bank performance. According to Riahi-Belkaoui as quoted by Mawardi (2005), ROA is used to measure the financial performance of multinational companies, especially from the point of view of profitability and investment opportunities. ROA shows the effectiveness of the company in generating profits by optimizing the assets owned. The higher the profit generated, the higher the ROA, which means that the company is more effective against the use of assets to generate profits. Measuring the level of profitability is important to the bank, because high profitability is the goal of every bank. ROA is the ability of the capital invested in all the assets of the company to generate profits. ROA uses the percentage of earnings to assess effectiveness in the use of company assets.

2.8. Capital

The capital factor are used to assess the extent to which the bank meets the capital of the bank, the adequacy of capital provision must comply with the provisions of Bank Indonesia regulating the minimum capital requirement for commercial banks. With sufficient capital, the bank can utilize part of its capital to finance the need for adequate infrastructure and facilities to carry out bank operations. Lack of capital is a common phenomenon experienced by banks of developing countries. Lack of capital can be sourced from two things, the first are due to small amount of capital, the second is a poor quality of capital. Thus, the supervisor of the bank must be sure that the bank must have sufficient capital, both quantity and quality. In addition, shareholders and bank managers must be fully responsible for the invested capital.

Assessment of capital factor includes evaluation on capital adequacy and adequacy of capital management. In addition, in assessing the adequacy of capital, banks should also link capital adequacy with Bank Risk Profiles such as operational risk, market risk and credit risk. The higher the risk of the bank, the greater the capital that must be provided to anticipate those risks.

Based on Bank Indonesia Regulation (PBI) Number: 13/1/PBI/2011, regarding the Rating of Commercial Banks, capital factor rating is categorized into 5 ratings, Rank 1, Rank 2, Rank 3, Rank 4, and Rank 5. Sequence a smaller capital-factor rating reflects better bank capital conditions.

2.9. CAR

CAR is a ratio that measures the adequacy of capital against the risk of bank assets. Cashmere (2013. p. 286) states that CAR is a

ratio showing how far all bank assets that contain risks (inclusion loans, securities, bills with other banks) can be financed from the bank's own capital, in addition to obtaining funds from sources in outside, such as public funds, loans (debt) and others. CAR is an indicator of the bank's ability to cover its decline in assets as a result of bank losses caused by risky assets such as loans.

Based on Bank Indonesia regulation, bank capital consists of core capital and complementary capital while ATMR is calculated based on the value of each asset item in the balance sheet multiplied by the weight of each risk. The higher the CAR the better the condition of a bank. Based on Bank Indonesia Regulation Number 15/12/PBI/2013 concerning the obligation to minimum capital provision of commercial banks that sets minimum CAR for commercial banks of Indonesia is 8%.

2.10. NPL

Berger and De Young proposed four hypotheses that explain the relationship between cost efficiency and NPLs that have a causal relationship pattern or a two-way relationship pattern. The first hypothesis, the bad luck hypothesis, predicts the external events that can improve the banking NPL and increase operating costs, which ultimately reduce the efficiency of the bank. These additional operating costs arise from a variety of sources including the cost of supervision of troubled borrowers, evaluation of warranties, bonding costs and a guarantee takedown in the event of default. In summary in this hypothesis, an increase in NPL volume leads to a reduction in cost efficiency. The second hypothesis, the bad management hypothesis that low efficiency hypotheses is a signal of poor performance, which affects the guarantee on credit issued. Poor managerial can be caused by manager failure of managing loan/loan portfolio, minimum knowledge in credit evaluation and inappropriate resource allocation for credit supervision. This thus increases the volume of NPLs. Therefore, this hypothesis assumed the decrease of efficiency has a positive effect of the increase in NPL. The third hypothesis is the "skimping hypothesis" hypothesis which mentions the amount of resources allocated to credit evaluation and supervision affecting NPLs and bank efficiency. Managers are faced with the choice of avoiding short-term costs of credit evaluation and supervision to improve profitability, but in the long run will result in increased NPLs. The austerity behavior gives the impression that banks are very efficient in the short term because assessing at a smaller cost can produce the same results, on the one hand the NPL is growing rapidly. Based on this hypothesis, the higher level of efficiency actually increases the amount of NPL. Hypothesis four is a moral hazard hypothesis which mentions the manager of a bank of a small capital preference for risk, therefore a bank of a small capital can cause an increase in credit problems.

NPLs or non-performing loans are among the key indicators for assessing bank function performance. One of the functions of the bank is as an intermediary institution or liaison between parties who have excess funds with parties who need funds.

The largest income of a bank comes from interest income on loans extended to the community, and the largest source of funds of a bank also comes from the community in the form of third party funds (DPK), so that the activity of fund raising of people that have excess funds and then channeling the funds back to society in the form of credit is a major activity or function as a bank.

Loans given to the community are not without risk of failure or loss. Bank Indonesia (BI) through Indonesian Banking Regulation (PBI) stipulates that the ratio of NPLs is based on the ratio of total NPL with total credit with a maximum amount of 5%. For example, a bank experiencing a non-performing loan of 50 with a total credit of 1000, then the bank's NPL ratio is 5% (50/1000 = 0.05).

While in NK is calculated based on the amount of CKPN (Provision for Impairment Losses) in accordance with Bank Indonesia Circular Letter Number 11/33/DPNP effective January 1, 2010. CKPN is an allowance established if the carrying amount of credit after impairment is less than the value recorded early (PAPI, 2008). CKPN is the amount derived from the carrying amount of to the amount recoverable from the assets (Febriati, 2013). CKPN is a special reserve fund set up by banks to cope with uncollectible credit risk. Establishment of CKPN funds based on credit rating by banks. A credit assessment is the process of establishing a single quantitative measure or score for a borrower through a predicted borrower's loan performance in the future. Guidance of the recognition and measurement of CKPN used by banks is the Accounting Guidelines of Indonesian Banking (PAPI) 2008 which has been referring to PSAK 55 revision 2011. So the formula for calculation of NPL used by the author is the percentage comparison of total CKPN with total credit.

2.11. Loan Amount Ratio/Bank Loan (LDR)

LDR is the ratio used to see the size of credit and bank liquidity, this ratio measures the composition of the loan amount given compared to the amount of third party funds received by the bank. There are six known loan loan theories, namely:

2.12. Loan Pricing Theory

Banks are not always able to set high interest rates on loans. The bank must consider the issue of adverse selection and moral hazard because at the beginning of the meeting it is very difficult to judge the character of the borrower (Stiglitz and Weiss, 1981). If the bank sets the interest rate on the loan too high it will cause adverse selection issues because the risk-averse type of borrower will receive the high interest rate on the loan. When this type of borrower accepts loans it can lead to moral hazard as they tend to invest in high-risk projects (Olokoyo, 2011). Based on the thinking of Stiglitz and Weiss, we do not raise the interest rate on loans is appropriate when considering the risks faced by the borrower.

2.13. Credit Market Theory

The model of the neo-classical credit market is the basis of credit terms. If the warranties and agreements do not change then the interest rate becomes the only price mechanism. When demand for credit increases while fixed credit offerings then the interest rate will rise, and vice versa. Likewise, if it is believed that the level of business risk faced by the borrower is higher then it will be subject to higher interest rate (Ewert et al., 2000).

2.14. Commercial Loan Theory

This theory is considered the most ancient, another name of this theory is the real bills doctrine. This theory began to be known about 2 centuries ago. The study of this theory was carried out by Adam Smith in his famous book The Wealth of Nation published in 1776 (in the Online Library of Liberty, 1981). This theory assumes that banks can only provide loans with short-term trading letters that can be withdrawn by itself (self liquiditing). Self Liquiditing means lending has a meaning for repayment.

2.15. Shiftability Theory

The shifty theory pioneered by Moulton (1918) is the theory of displaced assets and this theory assumes that the liquidity of a bank depends on the ability of the bank to transfer its assets to others at a predictable price, for example, it is acceptable to banks to invest in the open markets short term in its asset portfolio. If under the conditions of the depositor wants to withdraw the funds then the bank only sells the investment and pays to the depositor.

2.16. Anticipated Income Theory

In the 1930s and 1940s, banks developed a new theory called anticipated income theory. This theory explains that each bank should be able to provide long-term credit in which the repayment of principal repayments plus interest can be expected and scheduled payments in the future in accordance with a predetermined period of time. Customer repayment schedule in the form of principal and interest installments will provide cash flow on a regular basis that can be used to meet bank liquidity needs.

2.17. The Liability Management Theory

The purpose of this theory is how banks can manage their pasivanya to be used as a source of liquidity (Kannan, 1996). The liquidity required for the bank is:

a. To face withdrawal by the customer.
b. Meet the obligations to the bank due.
c. Meet customer loans to demand.

LDR can also be used to assess bank management strategies. Conservative bank management usually has a relatively low LDR, whereas if the LDR exceeds the tolerance limits it is said that bank management is very expansive/aggressive. The higher the ratio gives an indication of the lower bank liquidity capability in question, due to the amount of funds needed to finance the credit becomes larger. This ratio is also an indicator of vulnerability and ability of a bank. The safe limit of a bank's LDR are about 80% with tolerance limits ranging between 85% and 100% (Dendawijaya, 2009. p. 116).

2.18. Operational Cost Operating Income (BOPO)

According to Veithzal (2007. p. 722) BOPO is a comparison between operational costs and operating income in measuring the level of efficiency and ability of banks in conducting their operations. As the basis of analysis to reveal the operational costs of banks, the author tries to adopt the theory of cost companies/banks (banking operational cost theory), namely.

2.19. Transactional Cost Theory

This theory is a fraction of microeconomics that analyzes from the supply side of profit maximization. In this theory production cost have an important position. Coase (1937) through his work entitled the nature of the firm (Williamson and Winter, 1993) became the first to show that as an additional cost of production costs transaction costs must be considered in the context of the company.

Leon and Ericsson (2007. p. 110) state that operating income consists of: (1) Interest yield, which is obtained from placement of earning assets, (2) Commissions and fees represent income from services transactions provided by banks to customers, (3) Foreign currency revenues are obtained from foreign exchange transactions conducted by banks, (4) non-operating income, is revenue derived from non-business principal of the bank.

Frianto (2012. p. 72) states that the operational costs are calculated based on the sum of the total interest expense and total other operating expenses. Operating income is the sum of total interest income and total other operating income.

Operational efficiency can be achieved through careful planning, measurable activity and revenue targeting, and expenditure restrictions. Give the principal activities of the bank in principle are to act as an intermediary, which is collecting funds of the public, then the cost and operating income of the bank are dominated by the cost of interest and interest. This so-called efficiency ratio is used to measure the bank's management capability in controlling operational costs are operating income (Almilia and Herdiningtyas, 2005). According to Bank Indonesia through SE BI No.6/73/Intern/2004, operating efficiency is measured by comparing total operating costs of total operating income or often called BOPO with a ratio not exceeding 90%.

2.20. Third Party Fund Growth (Deposit Growth – DG)

From the depositors' perspective there are three theories about saving behavior explaining why depositors are willing to deposit their funds of the form of savings, the three theories are:

a. The traditional model of the life cycles hypothesis by Modigliani and Richard (1954); According to this model a rational person spends his money on the basis of his ability and refers to the stages of his life's journey. The life cycles hypothesis states that a person's consumption pattern is based on his earnings expectations to secure his or her life's needs. In productive times a person will set aside some of his income in preparation for retirement.
b. Fixed income hypothesis by Friedman (1957); this theory states that a person will save if he thinks his or her average long-term income (permanent income) will be less than his current income.
c. The buffer-stock theory of (Deaton, 1991; Christopher, 1997). This theory states that someone will prepare the funds (saving) in case of accident or something that is not desired to occur and also to maintain the uncertainty of income that occurs to the future.

From the bank side, the growth of saving or growth of third party funds is the percentage of third party fund growth from the previous time. The greater the value of DPK growth shows the greater customer confidence and show the success of a bank

strategy in attracting the public to save the funds of the bank. The third party funds obtained by adding the demand deposits, savings and deposits. Calculation to find the value of DPK growth is determined based on the percentage comparison of DPK t-DPK t-1 difference between DPK_{t-1}.

Keynes (1936) in Arthmar and Brady (2011) conveys the theory of propensity to consume that explicitly relates between savings and income, stated that income is said to be one of the factors affecting savings. Keynes declared a modern consumption function based on modern psychological behavior, ie if there is an increase in real income, the increase is not used entirely to increase consumption, but from residual income is also used to save. According to Sumastuti (2013. p. 31), the theory of savings can not be separated from the theory of consumption, because they are related to each other. In an economy, consumption and savings behavior is difficult to know because it depends on many things, including the income and expectations of each individual. In addition, the differences in savings theory, differences and cultural changes in society and banking facilities in the form of credit/loans, resulting in household saving behavior are always changing. The behavior of household savings is determined by two important decisions, namely how much real income will be used for consumption and saving. Household consumption/savings planning can be simplified into two periods: Present and future. For consumption purposes, households will maximize utility of the life period.

2.21. Company Growth (Firm Growth - FG)

Niefert (2005) discusses the well-known theory of corporate growth Gibrat's law coined by Robert Gibrat (1904–1980) in 1931 or better known as the law of proportionate effect or proportionate growth which mentions that the growth of the company is not dependent on company size. Many studies justify the statement of Gibrat but many studies that can not prove the truth about Gibrat's theory of large companies. Several studies have concluded that knowledge of the relationship between firm growth, firm size and age of the firm becomes very important in the effort to determine the method of estimation and strategy for the firm.

In addition to the above-mentioned theory of Gibrat there are many theories that connect the growth of companies with profitability, some of which are:

1. Persistence of profit theory

   This theory was invented by Mueller in 1977, according to Mueller due to tight market competition then the profitability of the company is depressed to achieve a certain level of profit (certain value). This study proves that the market there is no barrier to entry and exit so that in the long term the company reaches the level of average profit.

2. Growth of the fitter theory

   This theory was introduced by Alchian in 1950, according to this theory a healthy company is reflected from corporate profits, a healthy company will grow and develop while unhealthy companies will be excluded from the market.

3. Theory of financing constraint

   This theory was pioneered by Soo and Jang (2011), this theory states that profit-generating companies can create opportunities to grow while companies that suffer losses do not get a chance to grow.

2.22. Classical Recardian Hypothesis

David Ricardo (1846) in Sraffa (1951) Healthy companies have the opportunity to grow, and will strive for more opportunities to grow even though it does not guarantee a better profit. This theory illustrates three things: (1) In the long run, profitability is at zero, (2) growth is sustained by a high level of profitability, (3) profitability is depressed by the growth of the company.

By using theoretical study, the research hypothesis can be described as follows: (1) Company Growth (FG) has a positive effect on profitability, (2) CAR as a proxy of capital and solvency have a positive effect on profitability, (3) NPL negatively affects profitability, (4) LDR as a proxy of loan and liquidity have a positive effect on profitability, (5) BOPO negatively affects profitability, (6) the growth of DPK (deposit growth) has a positive effect on profitability, (7) company growth (FG), CAR, NPL, LDR, BOPO and DPK growth (DG) jointly affect profitability (ROA), (8) corporate growth (FG) has a positive effect on company value, (9) CAR has a positive effect on company value, (10) NPL negatively affects the value of the company, (11) LDR has a positive effect on firm value, (12) BOPO negatively affects the value of the company, (13) the growth of DPK (DG) has a positive effect on firm value, (14) profitability (ROA) has a positive effect on company value (TOBIN), (15) company Growth (FG), CAR, NPL, LDR, BOPO, growth of DPK and profitability influence jointly to company value (TOBIN).

3. RESEARCH METHODS

This research is done by descriptive and associative method with quantitative data method approach. Descriptive and associative methods are used to estimate and analyze the effect of profitability and its implications on firm value. Profitability is influenced by 6 (six) variables: Company Growth (FG), CAR, NPL, LDR, BOPO, Gainment of DPK and Profitability is measured by ROA while company values is measured by Tobin's Q.

The population of research in banking sector companies listed on the BEI during the period 2010-2015 as many as 42 banks. Sampling method is by using purposive sampling method by selecting certain samples according to the criteria determined and obtained 27 banks.

3.1. Panel Data Regression Model

The panel data regression method is a regression analysis method of a combination of time series and cross section, in which data are processed from time series including one object/partial (FG, CAR, NPL, LDR, BOPO, DG, ROA and TOBIN) at some period (annual) while cross-space data is from some object or unit (banking sector company) with some kind of data in certain period of time. The estimation models are often used in panel data regression methods,

namely fixed effects model (FEM) and random effect model (REM). FEM assumes that the individual effects of each firm are related to the variables in the model, while REM assumes that the individual effects of each firm are independent of the variables in the model. Both of these methods will be applied to this research. The panel data regression models are as follows:

1. Pooled least square model
   - $ROA_{it} = \beta_0+\beta_1 FG_{it}+\beta_2 CAR_{it}+\beta_3 NPL_{it}+\beta_4 LDR_{it}+\beta_5 BOPO_{it}+\beta_6 DG_{it}+\varepsilon_{it}$
   - $TOBIN_{it} = \beta_0+\beta_1 FG_{it}\ \beta_2 CAR_{it}+\beta_3 NPL_{it}+\beta_4 LDR_{it}+\beta_5 BOPO_{it}+\beta_6 DG_{it}+\beta_7 ROA_{it}+\varepsilon_{it}$
2. FEM
   - $ROA_{it} = \beta_0+\beta_1 FG_{it}+\beta_2 CAR_{it}+\beta_3 NPL_{it}+\beta_4 LDR_{it}+\beta_5 BOPO_{it}+\beta_6 DG_{it}+\varepsilon_{it}+\Sigma_{i+7} D_i+\varepsilon_{it}$
   - $TOBIN_{it} = \beta_0+\beta_1 FG_{it}+\beta_2 CAR_{it}+\beta_3 NPL_{it}+\beta_4 LDR_{it}+\beta_5 BOPO_{it}+\beta_6 DG_{it}+\beta_7 ROA_{it}+\varepsilon_{it}+\Sigma_{i+8} D_i+\varepsilon_{it}$
3. REM
   - $ROA_{it} = \beta_0+\beta_1 FG_{it}+\beta_2 CAR_{it}+\beta_3 NPL_{it}+\beta_4 LDR_{it}+\beta_5 BOPO_{it}+\beta_6 DG_{it}+\varepsilon_{it}$
   - $TOBIN_{it} = \beta_0+\beta_1 FG_{it}+\beta_2 CAR_{it}+\beta_3 NPL_{it}+\beta_4 LDR_{it}+\beta_5 BOPO_{it}+\beta_6 DG_{it}+\beta_7 ROA_{it}+\varepsilon_{it}$
   - $\varepsilon_{it} = U_i+V_i+W_{it}$

Where, ROA it profitability in year t for firm to 1 (hereinafter expressed as i), TOBINit = Tobin's Q corporate value in year t for i, FG_{it} = Company growth in year t for i, CAR_{it} = capital adequacy ratio (of year t for i, NPL_{it} = non performing loan of year t for i, LDR_{it} = loan amount of year t for i, $BOPO_{it}$ = operational cost of year t for i, DG_{it} = GDP growth of year t for i, β_0 Intercept of cross variant and cross unit β_1 β_2 β_7 = parameter of each variable to n or path coefficient X_1, X_2, X_7, ε_{it} = residual to it, U_i = residual component cross section data to i, V_t = residual component time series data to t, W_{it} = component residuals combined with year t for i.

3.2. Research Result

The result of paired tests using Chow test, LM test, and Hausman test on the three panel data regression methods, is needed to decide which models on panel data regression method used further to estimate and analyze the determinant of profitability and its implication to firm value of 27 banking companies. After the paired testing through the three test equipment, it is concluded that the REM is used because the REM is selected through two test equipments from three test equipments used, namely LM test and Hausman test.

The REM applied to this study is estimated generalized least squares, resulting in a white heteroscedasticity consistent standard error and variance that serves to eliminate the problem of heterokedastisitas and mengkonstankan residual. While the autocorrelation test problem is not hinted and can be ignored in the REM. But based on the Durbin-Watson Stat test. If the result is close to much there is no autocorrelation, value close to 2 that is 1.307986 then there is no autocorrelation between residuals.

The result of estimation of factors influencing profitability is corporate growth (FG), CAR, NPL, LDR, operational income operating cost (BOPO), and growth of DPK (DG) that uses the REM, can be written into the form of equation 4 below:

$$ROA = (C_i+0.007969)+0.038539\ FG - 0.019036\ CAR - 0.069874\ NPL + 0.009879\ LDR + 0.010254\ BOPO - 0.035302\ DG$$

Based on equations (4) and Table 2, it is interpreted and compared with the research hypothesis as follows: In the relationship/influence together shows that the variable growth of company (FG), CAR, NPL, LDR, BOPO and growth DPK (DG) profitability (ROA) of banking with a confidence level of 95%, where the value of P (F-statistic) of 0.00000 is smaller than $\alpha = 0.05$. The empirical findings of this study are in line with the research hypothesis which states that the independent variable of company growth (FG), CAR, NPL, LDR, BOPO, and growth of DPK (DG) influence on dependent variable profitability (ROA). Partially free variable CAR with t-statistic probability values (0.0004) have significant negative effect and free variable of NPL with t-statistic probability value (0.0287) have significant negative effect with 95% significance level to profitability free variable (ROA). The independent variable of firm growth (FG) with t-statistic probability values (0.0833) has a significant positive effect and the DPK (DG) growth free variable with t-statistic probability value (0.0661) has significant negative effect with 90% significance level to profitability free variable (ROA). Besides, independent variable of LDR have positive effect is not significant and BOPO free variable has positive effect not significant to profitability (ROA).

Regression of panel data onto each company at random effects model is shown in constant of 27 banks, most sensitive bank or bank has the greatest sensitivity (is PT. Bank Internasional Indonesia Tbk. (BNII) with a total value of 0.04562. While most banks are not sensitive or banks that has the smallest constants value is PT. Bank MNC International Tbk. (BABP), with a total value of −0.016448.

For the goodness of fit test measured by the coefficient of determination or $R^2 = 0.2522$, it can be interpreted that the variation on the change and fall of profitability (ROA) can be explained by the independent variable growth of company (FG), CAR, NPL, LDR, BOPO, growth of DPK (DG) of 25.22%, while the rest, which is equal to 74.78% can be explained by other variables outside the random effects model applied to the study. For the adjusted coefficient of determination (R^2 adjusted) yielded a number of 0.2233 which means that after considering the degree of freedom of the REM used, all independent variables used in this study can explain the changes that occurred in the banking stock price during the period 2010–2016 22.33%. The result of estimation of factors influencing firm values, that is company growth (FG), CAR, NPL, LDR, BOPO, growth of DPK, and profitability (ROA) using REM in Table 2, can be written in the form of equation:

$$TOBIN: (C_i+1.385980)+0.038048FG+0.158300CAR-0.413841\ NPL-0.065455LDR-0.036387BOPO +1.473858\ DG+0.075268\ ROA$$

Based on equations (5) and Table 3, it is interpreted and compared with the research hypothesis as follows: In the relationship/influence together shows that the growth variable of company

Table 2: Estimation of REM determinant profitability

Dependent variable: ROA?				
Method: Pooled EGLS (cross-section random effects)				
White diagonal standard errors and covariance (no d.f. correction)				
Variable	**Coefficient**	**Standard error**	**t-statistic**	**P**
C	0.007969	0.009176	0.868480	0.3865
FG?	0.038539	0.022106	1.743334	0.0833
CAR?	−0.019036	0.005300	−3.591836	0.0004
NPL?	−0.069874	0.031652	−2.207598	0.0287
LDR?	0.009879	0.008031	1.230140	0.2205
BOPO?	0.010254	0.006515	1.573965	0.1175
DG?	−0.035302	0.019072	−1.850959	0.0661
Random effects (cross)				
_BBCA-C	0.015712			
_BMRI-C	0.010794			
_BBRI-C	0.020606			
_BBNI-C	0.007426			
_BDMN-C	0.006426			
_BTPN-C	0.013421			
_BNGA-C	0.006568			
_BNII-C	0.037651			
_PNBN-C	3.24E-05			
_MEGA-C	−0.001200			
_NISP-C	−0.004121			
_BNLI-C	−0.005187			
_MAYA-C	−0.001161			
_BBTN-C	−0.004562			
_BKSW-C	−0.017896			
_BBKP-C	−0.005014			
_BEKS-C	−0.021403			
_BABP-C	−0.024417			
_SDRA-C	−0.001860			
_BVIC-C	−0.001761			
_AGRO-C	−0.004887			
_BSWD-C	0.009082			
_BBNP-C	−0.006959			
_BACA-C	−0.005976			
_BNBA-C	−0.001752			
_INPC-C	−0.011610			
_MCOR-C	−0.007952			
Weighted statistics				
R^2	0.252199	Mean dependent variable		0.007091
Adjusted R^2	0.223252	SD dependent variable		0.016069
SE of regression	0.014163	Sum squared residual		0.031090
F-statistic	8.712414	Durbin-Watson stat		1.307986
P (F-statistic)	0.000000			

(FG), CAR, NPL, LDR, BOPO, Growth of DPK (DG), and profitability (ROA) affect the value of the company (TOBIN) banking with the level 95% confidences, where the value of P (F-statistic) of 0.013858 is smaller than $\alpha = 0.05$. The empirical findings of this study are in line with the research hypothesis which states that the independent variable of company growth (FG), CAR, NPL, LDR, BOPO, growth of DPK (DG), and profitability (ROA) have an effect on dependent variable of firm value (TOBIN). Partially NPL free variable with t-statistic probability values (0.0308) has a significant negative effect of 95% significance level to variable of value of company (TOBIN). The independent variable of DPK growth (DG) with t-statistic probability values (0.0888) has a significant positive effect of 90% significance level on the firm's value-free variable (TOBIN). In addition, the independent variable of company growth (FG) had positive significant (0,561), CAR free variable had positive significant (0.4197), Loan free variable (LDR) had negative significant (02160), independent variable of operational cost (BOPO) (0.8562), profitability free variable (ROA) has a positive effect is not significant (0.7432) to the dependent variable of firm value (TOBIN).

The panel data regression for each company in the REM is shown in the constants of 27 banks, the most sensitive bank or the bank of the greatest sensitivity (indicated by the constant magnitude) is PT. Bank Central Asia Tbk. (BBCA) with a total value of 1.594508. While most banks are not sensitive or banks that has the smallest constants value is PT. Bank Victoria International Tbk. (BVIC), with a total value of 1,000,568.

For goodness of fit test measured by coefficient of determination or $R^2 = 0.106448$, it can be interpreted that variation of change and

Table 3: Estimation of REM determinants of corporate value

Dependent variable: TOBIN?				
Method: Pooled EGLS (cross-section random effects)				
White diagonal standard errors and covariance (no d.f. correction)				
Variable	**Coefficient**	**Standard error**	**t-statistic**	**P**
C	1.385980	0.141310	9.808076	0.0000
FG?	0.038048	0.067914	0.560235	0.5761
CAR?	0.158300	0.195632	0.809171	0.4197
NPL?	−0.413841	0.189829	−2.180071	0.0308
LDR?	−0.065455	0.052682	−1.242457	0.2160
BOPO?	−0.036387	0.200432	−0.181543	0.8562
DG?	1.473858	0.860555	1.712683	0.0888
ROA?	0.075268	0.229370	0.328149	0.7432
Random effects (cross)				
_BBCA-C	0.208528			
_BMRI-C	0.046539			
_BBRI-C	0.074413			
_BBNI-C	−0.004795			
_BDMN-C	0.066273			
_BTPN-C	0.134832			
_BNGA--C	0.005462			
_BNII--C	0.033155			
_PNBN-C	−0.026887			
_MEGA-C	−0.011177			
_NISP-C	0.026885			
_BNLI-C	−0.112065			
_MAYA-C	0.145756			
_BBTN-C	0.058938			
_BKSW-C	0.156715			
_BBKP-C	−0.032477			
_BEKS-C	0.026120			
_BABP-C	0.014701			
_SDRA-C	−0.120868			
_BVIC-C	−0.385412			
_AGRO-C	−0.039159			
_BSWD-C	0.086204			
_BBNP-C	−0.053947			
_BACA-C	−0.122117			
_BNBA-C	−0.105876			
_INPC-C	−0.049349			
_MCOR-C	−0.020391			
Weighted statistics				
R^2	0.106448	Mean dependent variable		0.466778
Adjusted R^2	0.065832	SD dependent variable		0.164979
SE of regression	0.159456	Sum squared residual		3.915650
F-statistic	2.620840	Durbin-Watson stat		1.742666
P (F-statistic)	0.013858			

fluctuation of company value (TOBIN) can be explained by the growth variable of company (FG), CAR, NPL, LDR, BOPO, the growth of DPK (DG) and profitability (ROA) of 10.65%, while the rest, which is 89.35% can be explained by other variables outside the random effects model applied in the study. For the adjusted coefficient of determination (R^2 adjusted) yields a number of 0.0658 which means that after considering the degree of freedom of the REM used, all independent variables used in this study can explain the changes that occur to the company value (TOBIN) proxie in the price banking stocks during the period 2010–2015 amounted to 6.58%.

In Figure 1, try to elaborate the summary of the research results. Where: Model 1 = indirect effect, with dotted line. Model 2 = direct effect, with full line, Sig = significant, T sig = not significant.

Based on Figure 1, that the results of model 1 and model 2 are done by a combined analysis, of the six independent variables shown from the regression coefficient is only two (four if with 90% significance level) that significantly affects profitability (ROA) and implies the firm value (TOBIN). Of the six independent variables used, only the independent variable growth of the firm (FG) has a greater coefficient value of the indirect effect on firm value than the coefficient value of its direct influence on firm value. On the coefficient value of independent variables CAR, NPL, LDR, BOPO and DG direct influence greater than coefficient value on indirect effect. In addition, profitability (ROA) has no significant effect on firm value (TOBIN). This suggests that profitability (ROA) can not mediate in relation to firm value (TOBIN).

Figure 1: Summary of research results

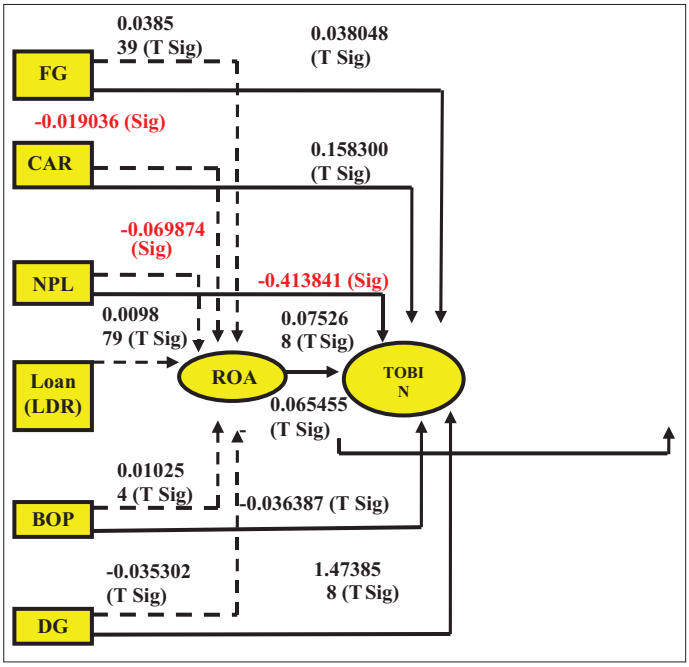

4. CONCLUSIONS

1. Company growth (FG) has a significant effect of positive coefficient on profitability (ROA).
2. CAR has a significant effect of negative coefficient to profitability (ROA).
3. NPL has a significant effect of negative coefficient on profitability (ROA).
4. LDR has no significant effect of positive coefficient on profitability (ROA).
5. Operational income operating cost (BOPO) has no significant effect of positive coefficient on profitability (ROA).
6. The growth of DPK (DG) significantly affects profitability of negative coefficient to profitability (ROA).
7. Corporate growth, CAR, NPL, LDR, operational income operating cost (BOPO) and DPK (DG) growth together significantly influence profitability (ROA). The independent variable that is the most dominant influence on the dependent variable of profitability (ROA) is the independent variable of NPL. This empirical finding is consistent with hypothesis 7 which states the independent variable of growth of company (FG), CAR, NPL, LDR, operational income operating cost (BOPO), and growth of DPK (DG) simultaneously affect the dependent variable profitability (ROA). The most sensitive banking shares or banks that have the largest average profitability (ROA) are PT. BNII and the least sensitive banks or banks with the smallest average profitability (ROA) are PT. Bank MNC International Tbk. (BABP). All the independent variables used in this model together account for 25.22% of variations in changes in bank profitability performance, while 74.78% is explained by other variables outside of this research model.
8. Company growth (FG) has no significant effect of the direction of positive coefficient on Corporate value (TOBIN).
9. CAR has no significant effect of the direction of positive coefficient on Corporate Value (TOBIN).
10. NPL has a significant effect of negative coefficient on Corporate Value (TOBIN).
11. LDR has no significant effect of negative coefficient toward Value of Company (TOBIN).
12. Operational income operating cost (BOPO) has no significant effect if negative coefficient toward Value of Company (TOBIN).
13. The growth of DPK (DG) significantly influences the positive coefficient on Corporate Value (TOBIN).
14. Profitability (ROA) has no significant effect on the direction of positive coefficient on Corporate Value (TOBIN).
15. Company growth (FG), CAR, NPL, LDR (LIQUID), Operational Income Operating Cost (BOPO), DPK (DG) and Profitability (ROA) growth together -the significant effect on Corporate Value (TOBIN). This empirical finding is consistent with the hypothesis 15 which states the independent variable growth of the company (FG), CAR, NPL, LDR, Operational Income Operating Cost (BOPO) DG) and Profitability (ROA) jointly affect the dependent variable Corporate Value (TOBIN). The independent variable that is the most dominant influence on the dependent variable of firm value (TOBIN) is the independent variable of DPK growth (DG). The most sensitive banking shares or banks that have the average value of the company (Tobin) the largest are PT. Bank Central Asia Tbk. (BBCA) with the total value of and the least sensitive bank or bank that has the average value of the company (Tobin) is the smallest PT. Bank Victoria International Tbk. (BVIC). All the independent variables used in this model together account for 10.64% of the variation in enterprise value (TOBIN), while 89.36% are explained by other outside variables from this research model.

REFERENCES

Aberlof, B.A. (1970), The market lemon's quality uncertainty and the market mechanism. Quarterly Journal of Economics, 84, 488-500.

Almilia, L.S., dan Winny, H. (2005), Ratio analysis of CAMEL on problems condition prediction at banking institution of period 2000-2002. Financial and Accounting Journal, 7(2), 72-79.

Arthmar, R., Brady, M.E. (2011), Keynes and the classics: The simplest approach. International Journal of Applied Economics and Econometrics, 19, 1-33.

Bhattacharya, S. (1979), Imperfect information, dividend policy and the bird in the hand fallacy. Bell Journal of Economics, 10, 259-270.

Brigham, E.F., Houston, J.F. (2006), Fundamentals of Financial Management. The Transfer of Ali Akbar Yulianto. Jakarta: PT. Salemba Empat.

Cashmere, D. (2013), A lux-story supply chain told by retailers to build a competitive sustainable advantage. International Journal of Retail and Distribution Management, 41(11/12), 273-287.

Cheung, C.S., Krinsky, I. (1994), Information asymmetry and underpricing of initial public offerings: Further empirical evidence. Journal of Business Finance and Accounting, 21, 739-747.

Christopher, C.D. (1997), Buffer stock saving and the life cycle/permanent income hypothesis. The Quarterly Journal of Economics, 112(1), 1-57.

Chung, K.H., Pruitt, S.W. (1994), A simple approximation of tobin's Q. Financial Management, 23(3), 70-74.

Coad, A. (2007), Exploring The 'Mechanics' of Firm Growth: Evidence From a Short-Panel VAR", CES Working Papers, Centre National De La Recherche Scientifique, Centre d'Economie de la Sorbonne.

Coase, R.H. (1937), The nature of the firm. Economica, 4, 386-405.

Daghestani, A., Mrad, S., Payne, B.C. (2014), A Financial Profile of those Firms that Maintained or Increased Market Value During a Period of Economic Recession and Financial Market Turmoil," Working Paper, Barry University.

Dao, T.B., Ankenbrand, T. (2015), Capital Adequacy and Banking Risk – An Empirical Study on Vietnamese Banks. Ideas, Hanoi: Seminar on Hanoi University and AVACO AG and University of Zurich. Available from: https://papers.ssrn.com/sol3/Delivery.cfm/SSRN_ID2530371_code434862.pdf?abstractid=2524233&mirid=1. [Last diakses on 2015 Agu 25].

David, R. (1846), On the Principles of Political Economy, and Taxation. London: John Murray.

Deaton, A. (1991), Saving and liquidity constraints. Econometrica, 59, 1121-1142.

Dendawijaya, L. (2009), Banking Management 2nd ed. Jakarta: Ghalia Indonesia.

Eriksson, K., Simpson, B. (2007), Deception and price in a market with asymmetric information. Judgment and Decision Making, 2(1), 23-28.

Ewert, R., Szczesmy, A., Schenk, G. (2000), Determinants of bank lending performance in Germany. Schmalenbach Business Review, 52, 344-362.

Fama, E. (1970), Efficient capital markets: A review of theory and empirical work. Journal of Finance, 25(2), 383-417.

Febriati, V. (2013), Influence of Annuity Interest Rate and Down Payment of Sales on Sales of Suzuki Motor at PT. Bintan Sentosa Indah Tanjungpinang. Umrah Journal, 3, 23-30.

Frianto, P. (2012), Fund Management and Bank Health. Jakarta: Rineka Cipta.

Friedman, M. (1957), A theory of the consumption function. Princeton: Princeton University Press.

Guerin, B., Gun, O. (2011), Efficient market hypothesis: What are we talking about? Real World Economics Review, 56, 19-30.

Hanafi, M.M., Halim, A. (2009), Financial Statement Analysis. 4th ed. Yogyakarta: YKPN.

Harahap, S. (2003), Critical Analysis of Financial Statements. Jakarta: Raja Grafindo Persada.

Haugen, R.A., Senbet, L.W. (1979), New perspectives on information, asymmetric and agency relationship. Journal of Financial and Quantitative Analysis, 14(4), 671-694.

Jensen, M.C., Meckling, W.H. (1976), Theory of the firm: Managerial behavior, agency costs and ownership structure. Journal of Financial Economics, 3(4), 305-360.

Kannan, K. (1996), Relevance and importance of asset liability management in banks. The Journal of Indian Institute of Bankers, 67(4), 150-160.

Keynes, J.M. (1936), The General Theory of Employment, Interest, and Money. Australia: The University of Adelaide Library.

Kim, K., Henderson, G.V., Garrison, S.H. (1993), Examination of Tobin's Q for Takeover firm. Quaterly Journal of Bussiness and Economics, 32, 625-658.

Leland, H., Pyle, D. (1977), Information asymmetrics, financial stucture and financial intermediation. Journal of Finance, 41, 93-105.

Leon, B., Ericson, S. (2007), Manajemen Aktiva Pasiva Bank Non Devisa. Jakarta: PT. Grasindo.

Lintner, J. (1956), Distribution of incomes of corporations among dividends, retained earnings and Taxes. American Economic Review, 16, 97-113.

Mabruroh. (2004), Benefits and influence of ratio of financial ratios in financial performance analysis of banking. Benefit, 8(1), 37-51.

Mantysaari, P. (2012), Organizing the firm Theories of Commercial Law, Corporate Governance and Corporate Law. 2012th ed. Berlin Heidelberg: Springer-Verlag.

Mawardi, W. (2005), Analysis of factors affecting the financial performance of commercial banks in Indonesia (case study at commercial bank with total asset less than 1 Trillion). Jurnal Bisnis Strategi, 14(1), 11-21.

Modigliani, F., Richard, H.B. (1954), Utility analysis and the consumption function: An interpretation of cross-section data. In: Kenneth, K.K., editor. Post-Keynesian Economics. New Brunswick, NJ: Rutgers University Press. p388-436.

Morris, R.D. (1987), Signaling, agency theory, accounting policy choice. Accounting and Business Research, 18(69), 47-56.

Moulton, F.R. (1918), School Science and Mathematics. Vol. 18. ???: Wiley Blackwell Publishers. p551.

Mueller, D.C. (1977), The persistence of profit above the norm. Economica, 44, 369-380.

Myers, S.C., Majluf, N.S. (1984), Corporate financing and investment decisions when firms have information, that investors do not have. Journal of Financial Economics, 12, 187-221.

Niefert, M. (2005), Patenting Behaviour and Employment Growth in German Start-up Firms: A Panel Data Analysis. ZEW – Zentrum für Europäische Wirtschaftsforschung/Center for European Economic Research, Discussion Papers No. 5-3.

Olokoyo, F.O. (2011), Determinants of commercial banks' lending behavior in Nigeria. International Journal of Financial Research, 2(2), 61.

PAPI. (2008), Indonesia Banking Accounting Guidance. Directory Banking Researsc. Bank Indonesia. Jakarta: PAPI.

Ross, S.A. (1977), Determination of financial structure: The incentive signaling approach. Bell Journal of Economics, 8, 23-40.

Saidi. (2004), Factors affecting capital structure of manufacturing companies go public in JSE 1997-2002. Jurnal Bisnis dan Ekonomi, 11(1), 44-58.

Siallagan, H., Machfoedz, M. (2006), Corporate governance mechanism, profit quality and corporate value. National Symposium on Accounting, 9, 23-26.

Simamora, H. (2000), Accounting: Business Decision Making Base, First Printing, Jakarta: Salemba Four.

Soo, C., Jang, K.P. (2011), Inter-relationship between firm growth and profitability. International Journal of Hospitality Management, 30(4), 1027-1035.

Spence, M. (1973), Job market signaling. Quarterly Journal of Economics, 87, 355-374.

Sraffa, P. (1951), Introduction. In: Sraffa, P., Dobb, M.H., editors. The Works and Correspondence of David Ricardo. Vol. I. Cambridge: Cambridge University Press.

Stiglitz, J.E., Weiss, A. (1981), Credit rationing in markets with imperfect information. The American Economic Review, 71(3), 393-410.

Sumastuti, Y. (2013), Analysis of Indonesian consumption. Jurnal Kajian Ekonomi, 1(2), 20-25.

Sunarto, N. (2013), The influence of non performing loan on return on assets of banking sector in Indonesia. Journal of Finance and Banking, 1(1), p. 13.

Syofyan, S. (2003), Decision go public and its relation to the performance of private banks in Indonesia. Jurnal Media Riset and Manajemen, 3(1), 1-17.

Veithzal, R. (2007), Bank and Financial Institution Management, Conventional and Sharia System. Jakarta: PT. Raja Grafindo Persada.

Wijaya, T. (2007), Contribution of financial ratios to changes of banking profits at surabaya stock exchange. Modus, 19(2), 20-34.

Williamson, O. (1993), Contested exchange versus the governance of contractual relations. Journal of Economic Perspectives, 7(1), 103-108.

Wolfe, J., Sauaia, A.C. (2003), The tobin's Q as a company performance indicator. Developments in Business Simulation and Experiential Learning, 30, 155-159.